TACHOMETER

AC-962A, 963A

*Input frequency 0.1Hz~20kHz

AC-963A

■ Features

- Input Frequency 0.1Hz~20kHz
- Reciprocal Counting System
- Accuracy ±0.008% rdg±1digit
- E²PROM Memory
- Sensor Power DC12V 100mA
- Power Supply AC90~264V
- Analog, BCD open collector(option)
- HI, LO Setpoint(AC-963A)

■ Specifications

Display:	6 Digit
Display Range:	0.0001~999999
Display:	LED 14.2mm (Red) AC-962A 10mm (Red) AC-963A 8mm (Green) AC-963A
Zero Display:	Leading Zero Display
Decimal Point:	Any setting 0.0, 0.00, 0.000, 0.0000
Measuring Time Standard:	Crystal Oscillator(2MHz)
Measuring System:	Reciprocal Counting System
Sampling Time:	0.5~9 second(Automatically setting by input pulse)
Display Renewal Time:	By Sampling or set 1~99sec
Input Signal:	NPN open collector, or non-voltage contact
Input Voltage Level:	H3.5V~30V L 0V~1.9V Magnetic sensor(±0.6V~±17V)
Input Frequency:	0.1Hz~20kHz
Min.Pulse width:	25μ sec. Duty 50%
Input Impedance:	For open collector input 6kΩ For Magnetic sensor input 3kΩ
Accuracy:	±0.008%rdg ±1digit (PS=1.0000, PPR=1)
Pre-Scaling:	P.S(Pre-scaling)0.0001~100 P.P.R 1/1~1/9999(set by front sheet switch)
Hold:	Hold terminal and COM Shorted
Reset:	Internal solder jumper Shorted
Overflow:	Display(------)When exceed max, input
Memory:	E2PROM
Sensor power supply:	DC12V±10%, 100mA(MAX.)but 50mA(Max.)for AC-96 □A -3
Applicable Detectors:	Rotary Encoder, Proximity switch, photo-Electric switch, Magnetic sensor
Out put:	①BCD Parallel open collector ②Analog Voltage 0.1~10V 1kΩ or more Current 4.16~20mA 500Ω or less
Operating Temperature:	0~50°C 45~85%RH
Power Supply:	AC90~264V (50/60Hz)
Power Consumption:	5VA
Dimensions:	48(H)×96(W)×130(D)mm DIN Size
Weight:	450g
Dielectric Strength:	Between power supply terminal and external terminal AC200V/min
Insulation Resistance:	100MΩ DC500V the above terminals

■ Comparing Section(AC-963A)

Control System:	Microcomputer
Setting Range:	0~999999 (HI and Lo)
Setting Method:	Front sheet switch
Comparing Conditions:	HI output HI SET>Measured Value→NC and COM short HI Set≦Measured Value→NO and COM short LO Output LO SET<Measured Value→NC and COM short LO Set≧Measured Value→NO and COM short
Comparing Relay Contact Output:	HI, LO transfer contact AC250V 0.5A resistive load DC30V 2A resistive load

■ Analog Output(F/V Method)

Voltage:	0.1~10V 1kΩ or more
Current:	4.16~20mA 500Ω or less (Can't use both)
Accuracy:	±0.5%F.S
Ripple:	20mVp-p or less

Frequency Range	Voltage Output	Current Output
20Hz~200Hz	1~10V	5.6~20mA
20Hz~2kHz	0.1~10V	4.16~20mA
200Hz~20kHz	0.1~10V	4.16~20mA

(change by internal switch)

■ BCD Output

Data:	Parallel Open Collector negative Logic
Number of Data:	30 bit (1-2-4-8)×6dighit+Decimal(4bit)+PC+OVF
Output Timing:	PC output 5msec~20msec
PC output time:	2msec ±30%
OVF output:	Exceed 6digit, OVF output active ON
Output Rating:	DC30V, 20mA(Max)
Decimal Point:	Output saturation voltage:0.75V(TYP) 20mA Open Collector output for D1~D4

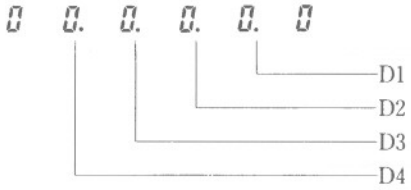

Sales, Service, Technical support
Topac Inc.
101 Derby St., Hingham MA 02043 USA
www.topac.com, sales@topac.com
Tel: 781 740 8778 Fax: 781 740 8779

TACHOMETER

AC-962A, 963A

■ Ordering code

AC-96□A-□

- Output
  1. None
  2. BCD (open collector)
  3. Analog (0.1~10V, 4.16~20mA)
- Function
  2. Prescaling
  3. HI,LO Setpoint Prescaling

■ Connection Diagram (For AC-963A)

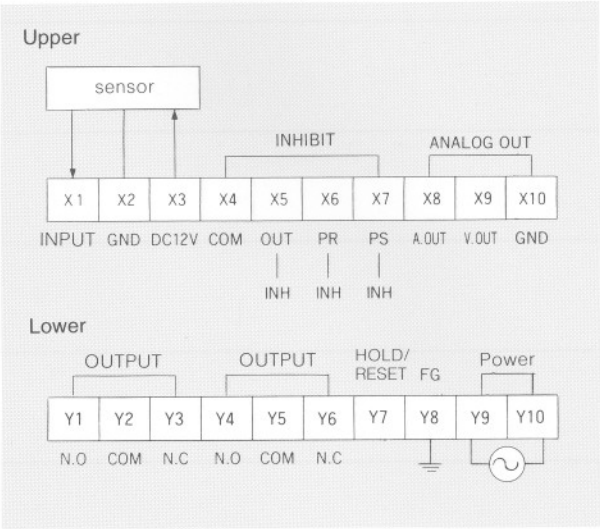

■ Dimensions

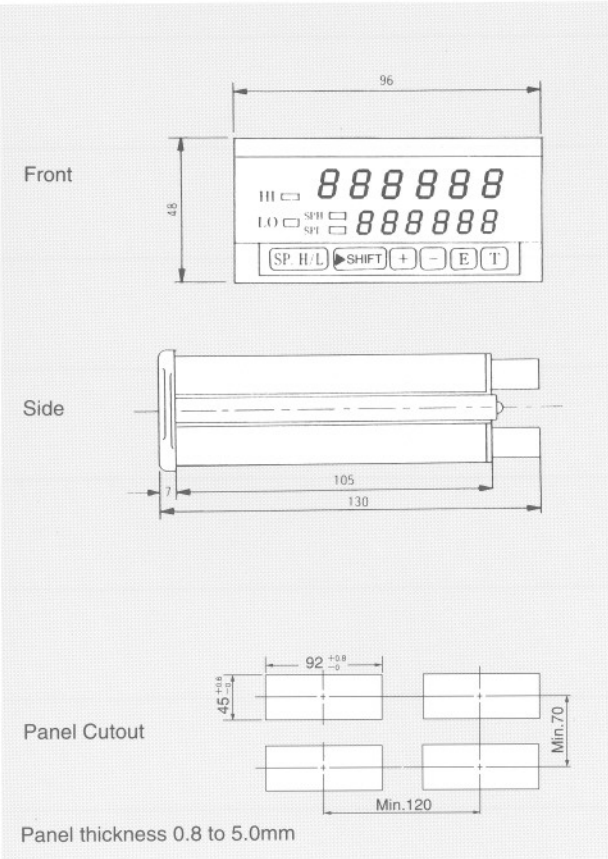

BCD output

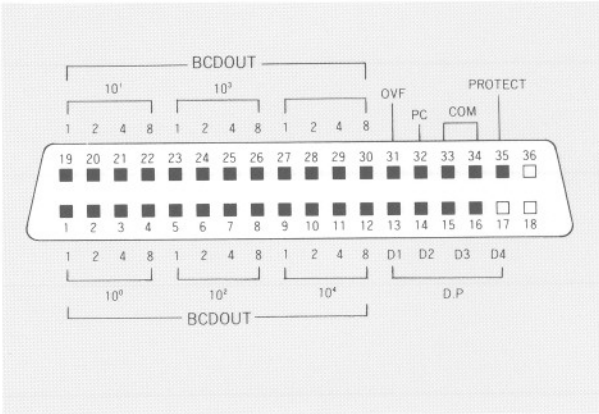

Sales, Service, Technical support
Topac Inc.
101 Derby St., Hingham MA 02043 USA
www.topac.com, sales@topac.com
Tel: 781 740 8778 Fax: 781 740 8779